copyright © 2023 ج ﻝ ﻡ

ﻭ [illegible] [illegible]

ج ﻝ ﻡ [illegible] ‗ p [illegible] [illegible] ف Φ

[illegible] ں ﺭ [illegible] [illegible] ﺭ [illegible] [illegible] 2 إ [illegible] [illegible] [illegible]

[illegible] ‰ ج ﻝ ﻡ [illegible] ج ﻝ ﻡ ‰

[illegible] [illegible] ‰ ├ ‰ ٠ ٥ [illegible]

ى [illegible] ﻩ ﻙ [illegible] ﺃ ₲ [illegible] ١ [illegible] ﻙ [illegible] [illegible] [illegible] ﻩ Î b

Ĵ [illegible]

ح ک گي

z لا ٨ ٧

z

z لا ٨ ٦ ת

z ج لا ٨ لا 1 https://www.ruijie.com.cn

z ج لا ٨ لا 1 ٧ https://www.ruijie.com.cn/fw/

z ج لا ٨ 7*24h أ ذ ٥ https://ocs.ruijie.com.cn

z ج لا ٨ 7*24h ٨ ٦ 4008-111-000

z ج لا ٨ —— ج

2.

2 I
1 ⅵ 1
1.1 ⊏ ⅋ ▌ 1
1.2 ⅄ 3
1.2.1 ⸗ ⅄ 3
1.2.2 ⅂ 4
1.2.3 ⅄ 6
1.3 h‡ 7
2 ├ ° 7
3 ⊏ 8
3.1 ⊏ 8

HD™.....

1

RG-CAM30-T AF 42°

RG-CAM30-S 95° 4K Sensor 4K

1.1

1-1

1-1

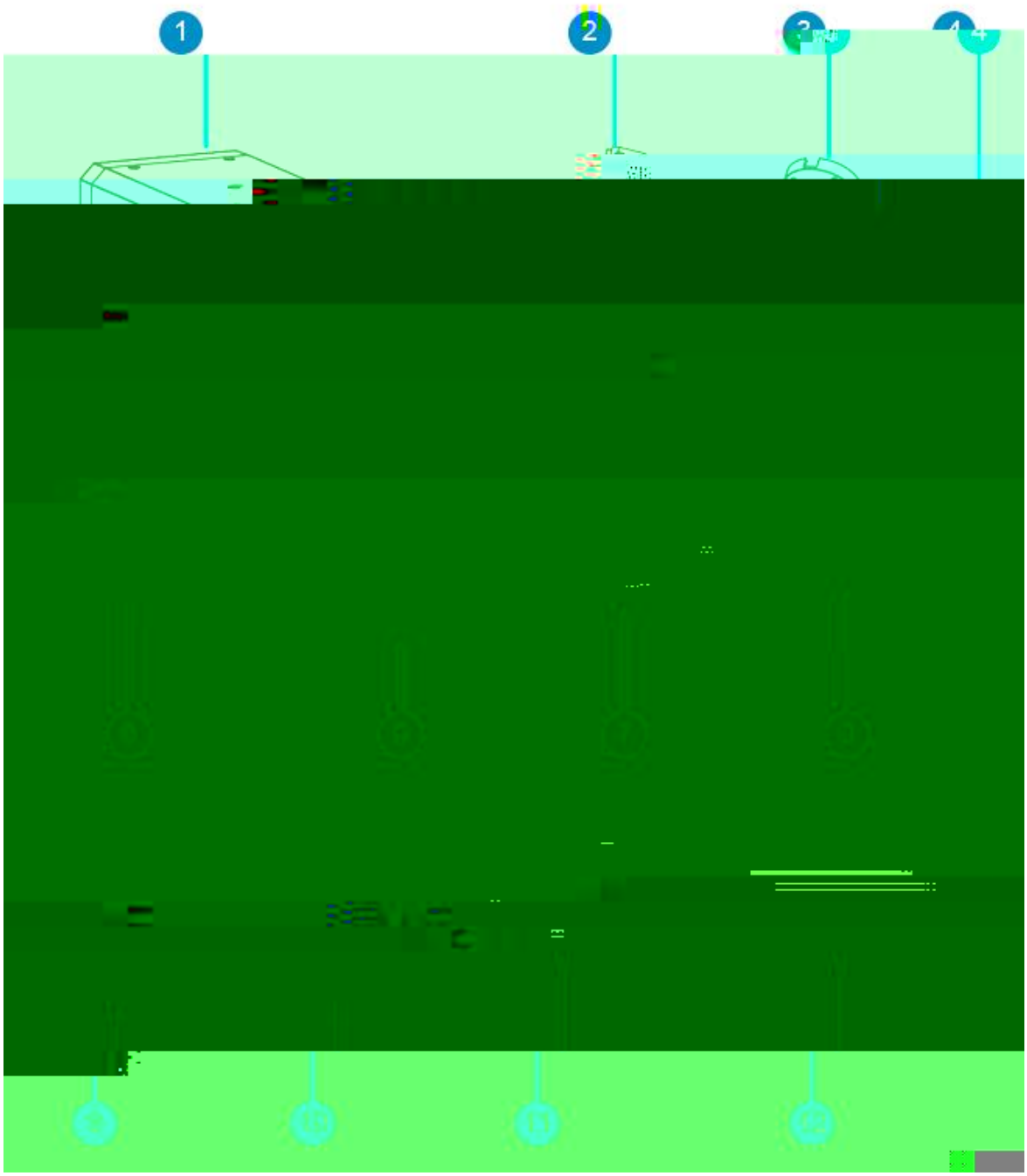

1.2

1.2.1

1-2

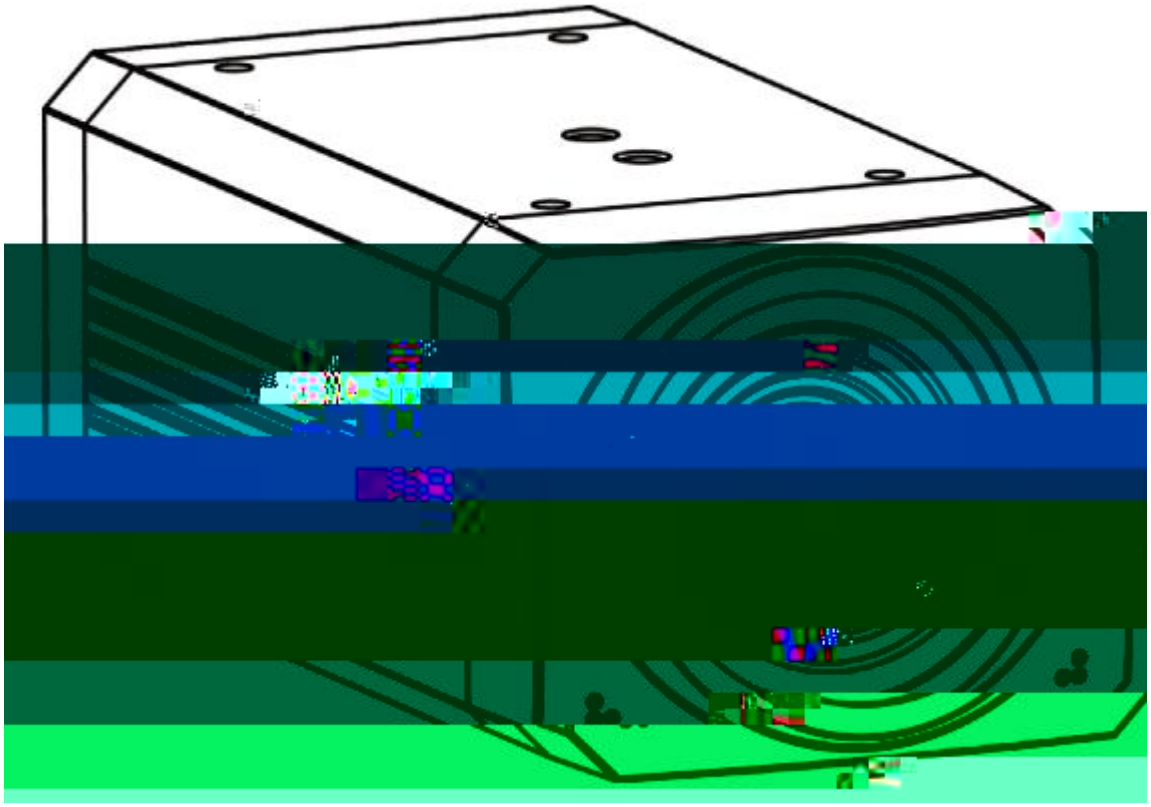

z AF ᄃᆡ

42° ᄃᆡ ᄃᆞ ᄒᆞ ᄇᆡ ᄉᆞᆯ ᄯᅡ ᄅᆞ 95° ᄃᆡ ᄀᆞ ᄏᆞ EPTZ

~ ▌

z ᄂᆞ

ᄉᆞ ᄒᆞ ᅟᅩᆼᅟᅩᆼ CMOS ᄂᆞ ᄂᆞ ᅟᅩᆼᅟᅩᆼ ᄒᆞ 2D 3D ᄂᆞ ᄂᆡ | ᄂᆞ ᄉᆞ ᄂᆞ ᄒᆞ ᄃᆞ ᄆᆞ ▌ ᄒᆞ ᄌᆞ 55dB

z ᄌᆞ

SDI ᄌᆞ ᄀᆞ ᄌᆞ ᄌᆞ 150 ᄂᆡ 1080P25 SDI ᄂᆞ ᄉᆡ ᄂᆞ ᄌᆞ

z POC POE

POC Power Over Cable POE Power Over Ethernet ᄉᆡ ᄂᆞᆫ ᄀᆞᆫ ᄋᆞ ᄋᆞ ᄂᆞᆫ ᄂᆞ ᄂᆞ ᄂᆞ

z ᄂᆡ ᄫᆞ

ᄉᆞ SDI ᄌᆞ ᄆᆞ

1.2.2

1-3 **mm**

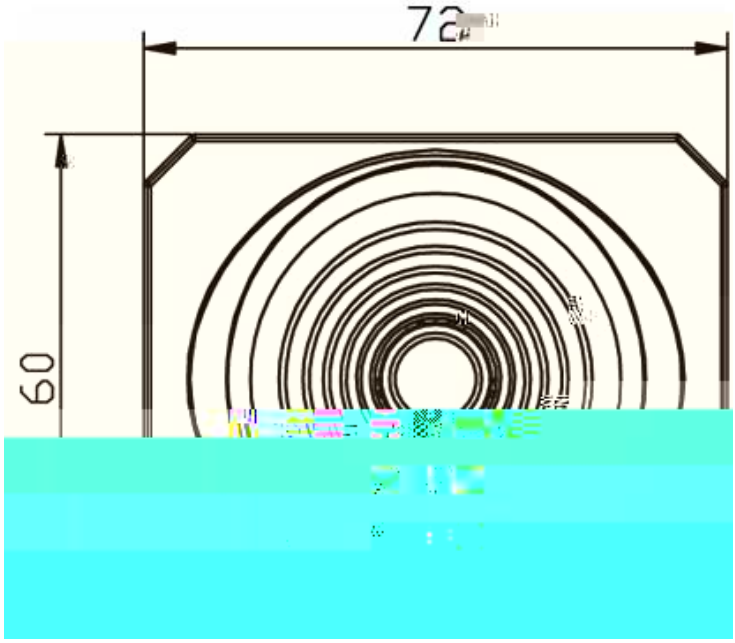

1-4

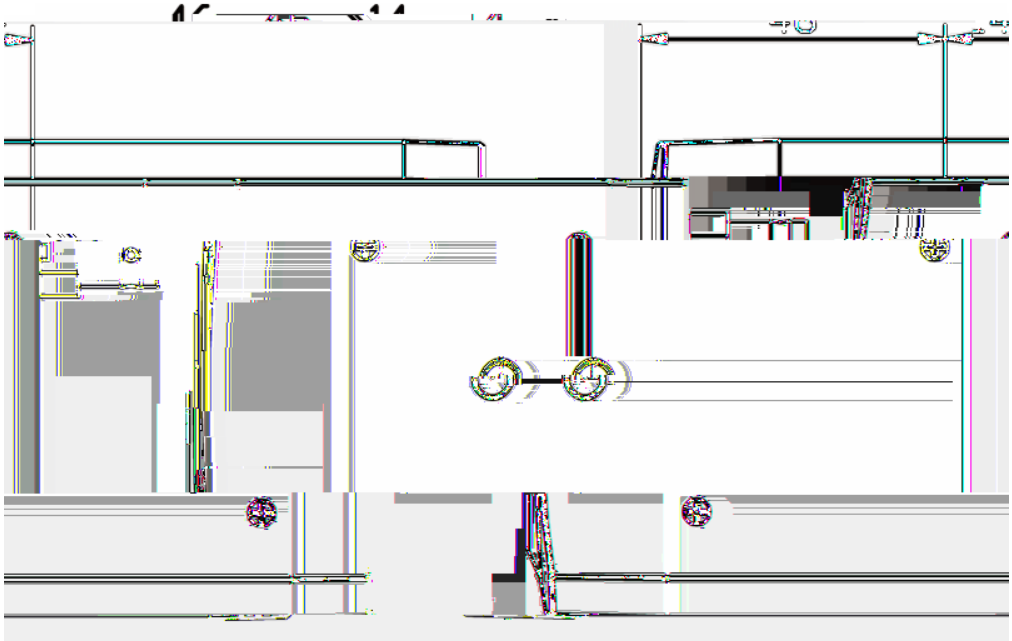

1-5

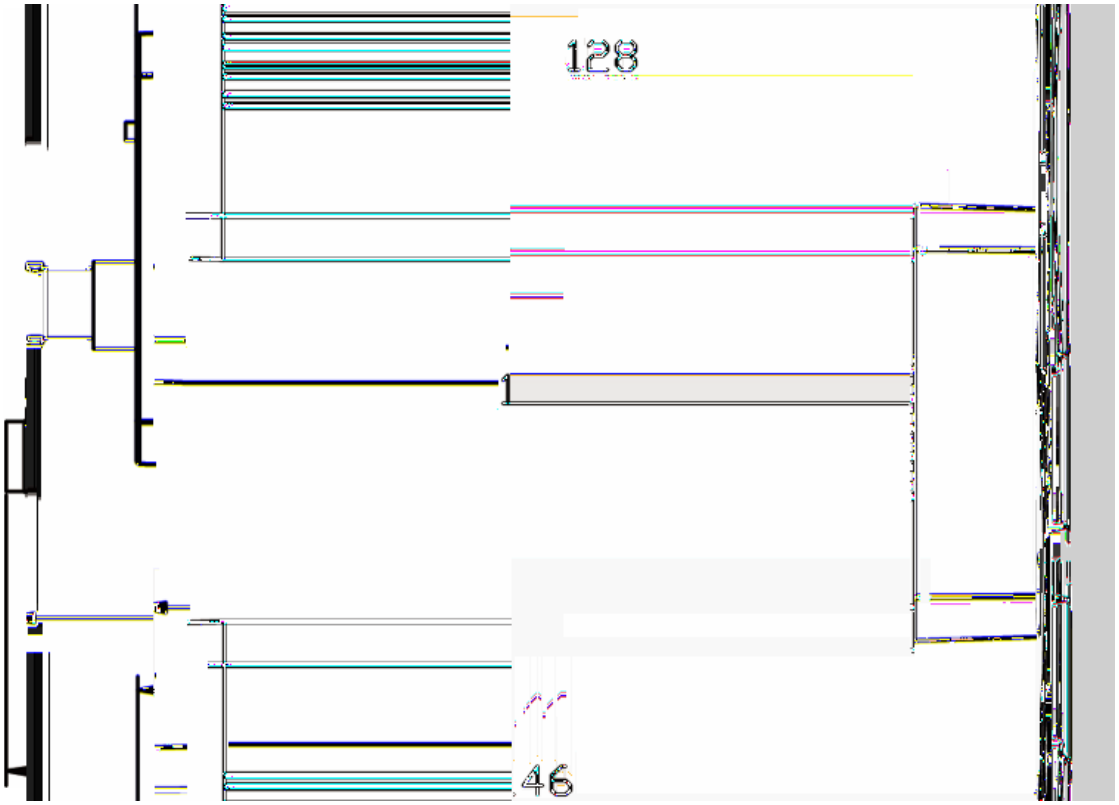

1.3

1-3

	RG-CAM30-T	RG-CAM30-S
	ٮ ٮ	ٮ
	846	
	3840*2160	
	25fps	
	42	95
	H.265/H.264/MJPEG ð ٮ ٮ	
	PoE IEEE802.3af ٮ ٮ ٮ	
	TCP/IP HTTP RTSP RTMP ONVIF DHCP ٮ	
	6W	
	DC 12V / PoE (IEEE1 253/83(0)-3(*2-3(.)11(3)-3(a)-3(f)]) TJETQEMC /P <</MCID 122	

2-1

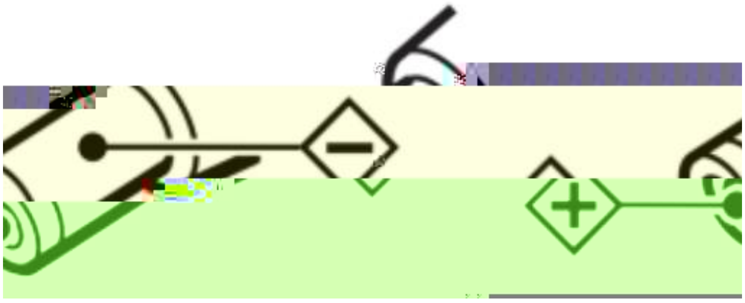

z

Ⴁ ↨ ᄃ ت ĩ . ꥥ ᄃ
ت ٍن Ͻ

z

ĩ 5 Φ Ѧ ꥥ ĩ 5 Φ ڿ

ᄐ

(ΣΙØ‰º +k.ṕ%73PЂp4 >

3

3.1

ᄃ ت

3-1

ڤ	ڤ ´ 6mm
	ᄃ PH2
ڨ Ⴁ	‰ ∟ ڤ ڷ
٭ Ꮷ ڿ	ᄃ ‹
ٿ	. ռ ᄃ ڷ

3.2

3-1

3.2.2

z ᴇ ᴊ ▯ ᴊ ' ᴊ ˍ 2.2-

xÀŽVp[illegible]F4B5PXÀž

3-2

3.2.3

2.1-2.4

Ñ ᴇ ᴜ ⌧ ᵢ ⸗ ᶜ ⌧ ' ᵖ ⌧ ᴇ ᴜ ⸗ 20~30° ɯ ᴠ
ᵓ ᵢ ᵓ ᵢ ⁝ ᴀ ᴇ ᴠ ᴎ ᴊ ⌧ ⌧ '

3.3

ᴙ ᴐ ᴐ ◊ ᴐ PoE ᴐ ᴐ ᵢ ᴀ ᴓ

z ᵢ PoE

ᴊ ᵢ ᵢ ᴀ ᵢ ᵢ ᴓ PoE ᴐ ᴊ ᴎ ᴆ ᵢ ᴊ

z ᴐ ◊ ᴐ

Ñ ᴊ ᵢ ᵢ ᴀ ᵢ ᵢ ᴊ ᴎ ᴆ ᵢ ᴊ

Ñ AC 220V ᴌ ᴐ ᵢ ‰ᵖ ᴐ ◊ DC 12V ᴐ ◊ ᵢ ᴐ
ᵢ

3.4

3.4.1

(1) ᴊ ᴇ ᴊ ᵒ ᵒ 6mm 6mm ᵢ

3-4

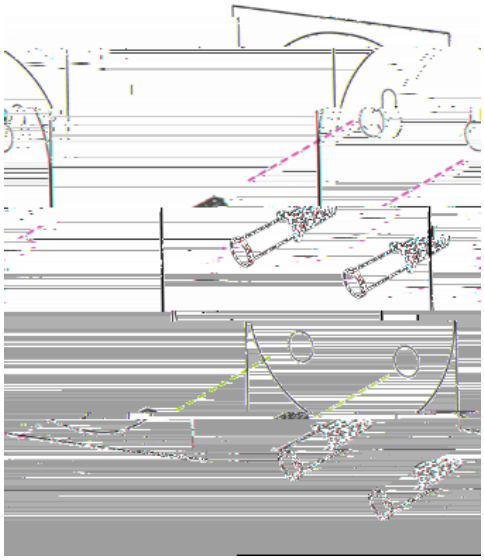

(2) ⸗ ᵢ ᴠ ᴀ ᴓ 3mm

3-5

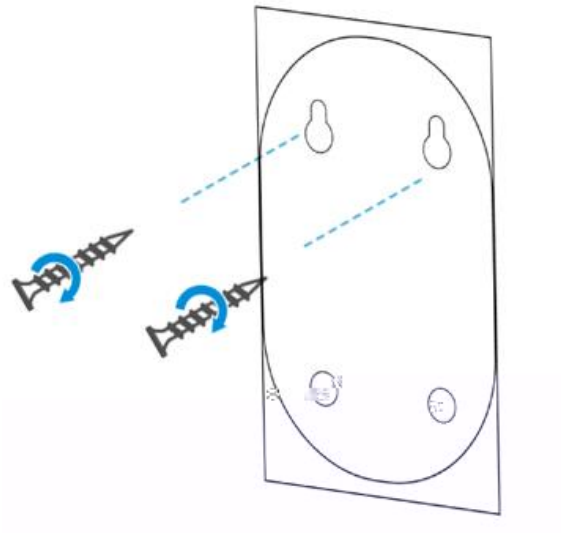

(3) ᵛ ᵓ 2 ⁵ ˩4 ᵛ ᴇ

3-6

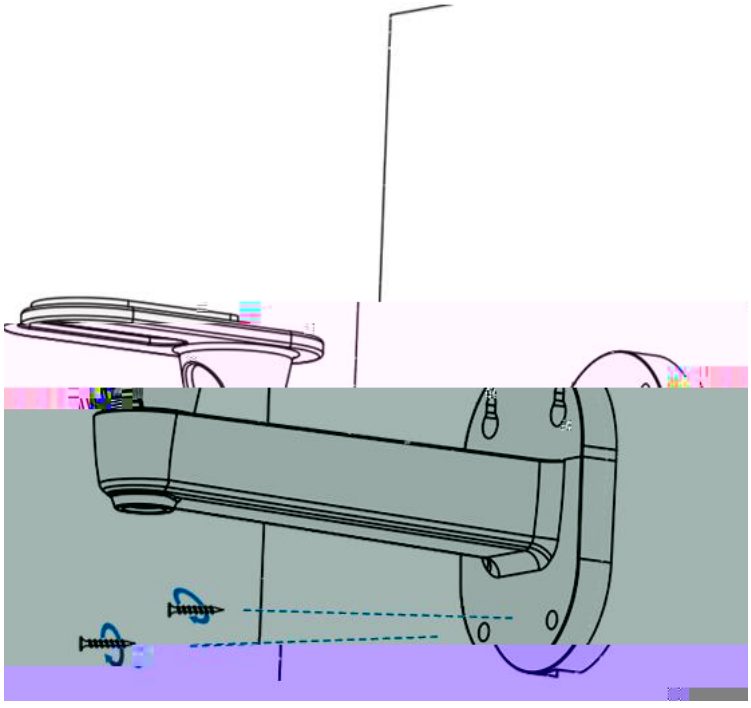

3.4.2

(1) ᵛ ᗡ ˧ᵊ ᵛ ˩

3-7

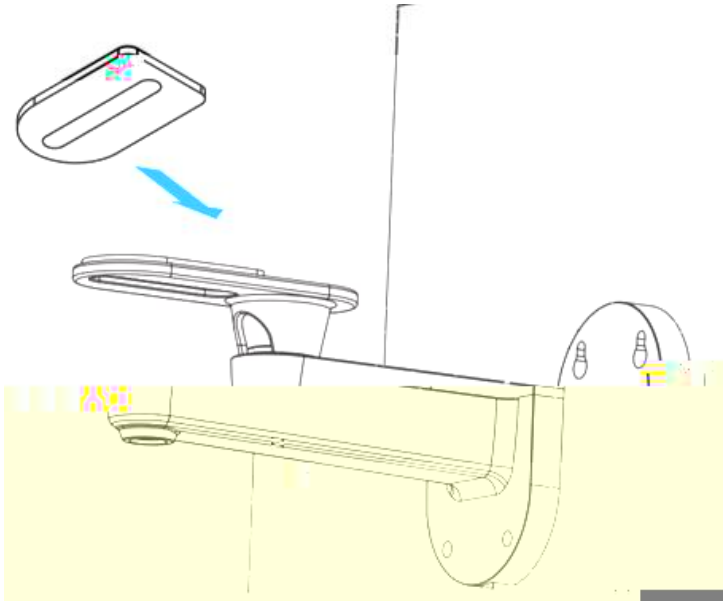

(2) ɪ L — ᵘ ᴏʙᴊ ᴜ

3-8

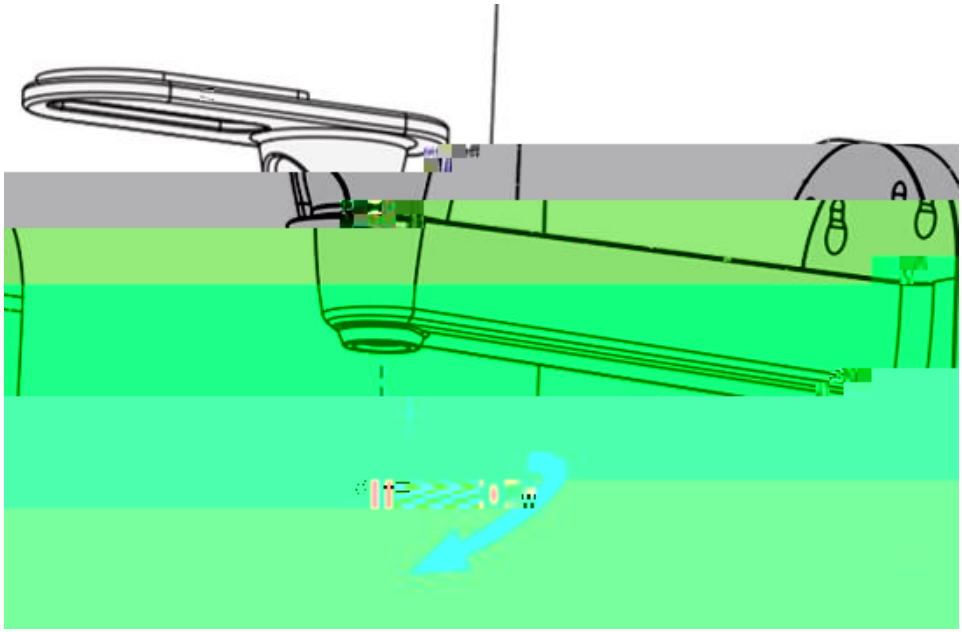

(3) ᴊ ᵘ

3-9

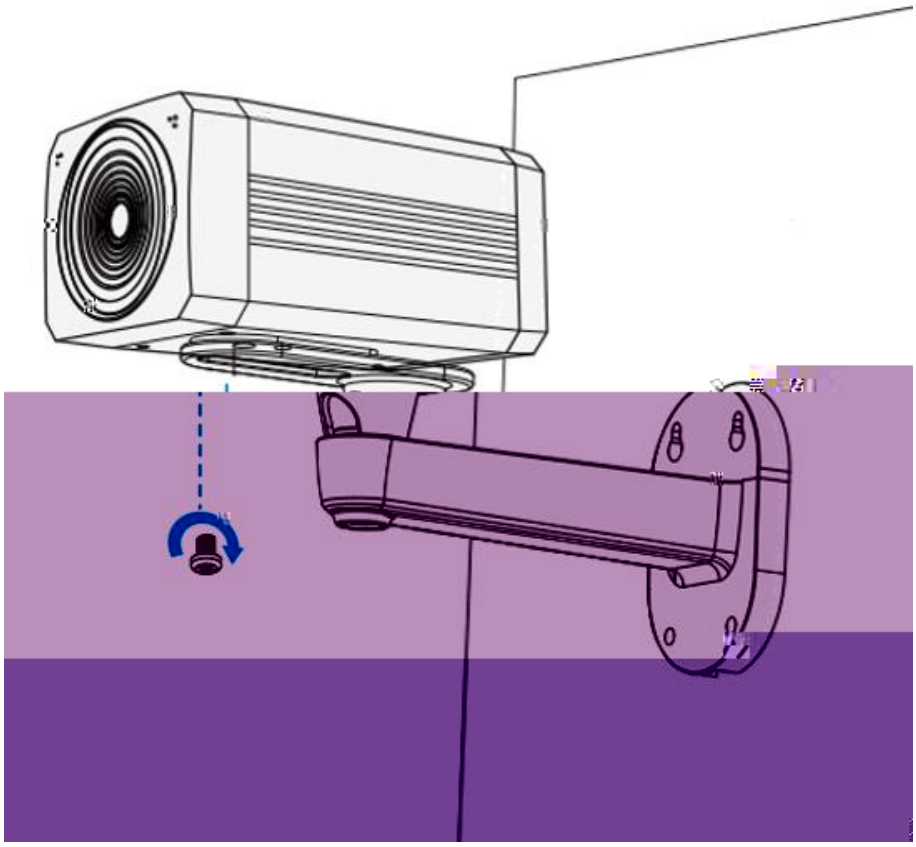

(4) ذ ل ل Ł

3-10

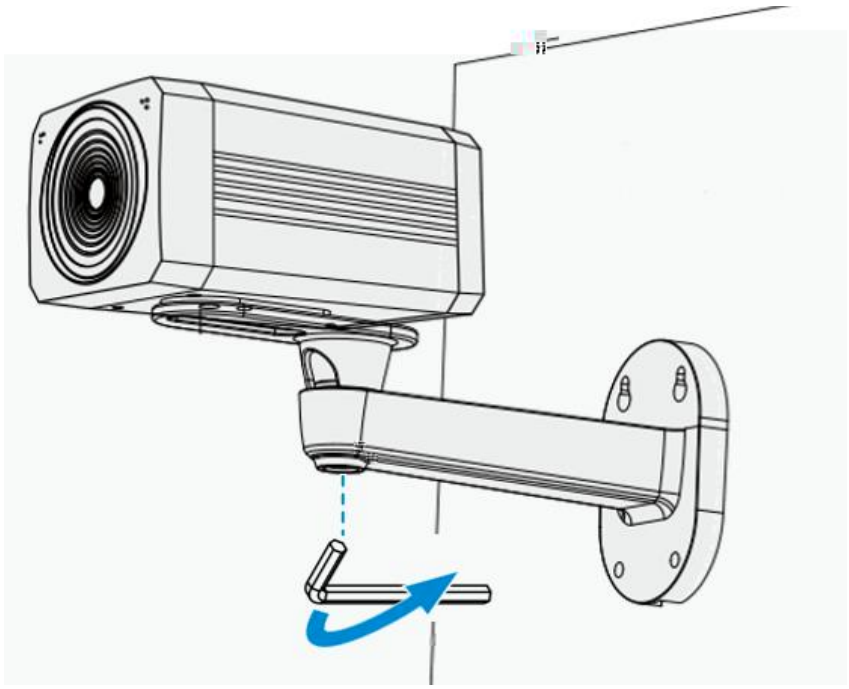

3.5

ᴉ ᴐ ᴐ ◊ ᴐ PoE ᴐ ᴐ ف

z ᴐ ◊ ᴐ ᴊ ᴊ ᴐ ◊ DC 12V

z PoE ᴐ PoE ᴓ

ᴊ ᴊ ف ♂ ᴊ ˘ ˜ ♂ ᵈ ˘ ♣ ˜ ˜ ف ᴛ ᴛ

4

4.1

ᴌ ᴉ ᴉ ᴉ PC ᴌ ᴉ ∂

z ᴊ ᴊ Windows 2000/2003/XP/Vista/7/8/10

z ᴊ ᴊ ᴉ TCP/IP

z ᴊ PC ᴉ ᴉ P4/128M RAM/40GHD ᴊ DirectX 8.0

z ⊨ ᴉ

Ñ IE ⊨ ᴉ H5 ᴉ ᴉ VLC ⊨ ᴉ ᴓ ᴉ ᴉ ᴌ VLC ᴊ 1 http://www.videolan.org/vlc/

ᴉ ᴇ 32 VLC media player ᴉ ᴇ ᴓ ᴉ * ˜

Ñ ᴌ ⊨ ᴉ H5 ᴉ ᴇ VLC

4.2 IP

ᴉ ᴉ IP ᴊ ᴊ ᴊ ᴓ ᴉ ᴌ ᴉ

ᴐ ᴓ PC ᴊ ᴊ ᴉ ᴉ ᴉ ᴉ ᴉ ف

z ᴐ ᴓ PC ᴉ ᴉ ᴉ ᴉ ف

z ᴐ ᴓ PC ف

4-1

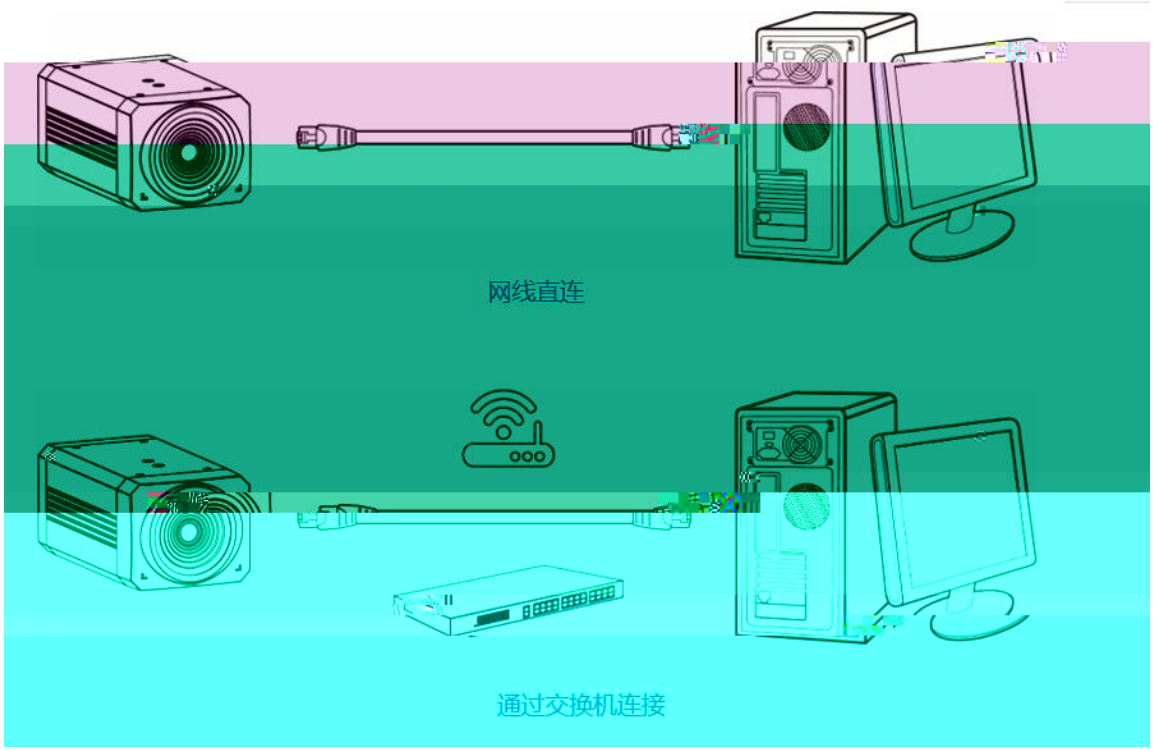

ᴉ ᴊ ᴉ ᴘ IP ᴊ ᴊ Webᴊ ᴊ ᴉ

z ᴊ ᴊ Webᴊ ᴊ ᴐ ᴗ PC ᴉ ᴉ ᴉ

a ᴐ ᴗ PC IP ᴊ ᴉ IP

- ᴇ IP ᴍ ᴎ IP 192.168.5.191

- ᴉ IP ᴍ ᴎ IP 192.168.5.163

b ᴇ ᴎ ᴌ ᴊ IP ᴉ admin ᴉ admin <` >

4-2

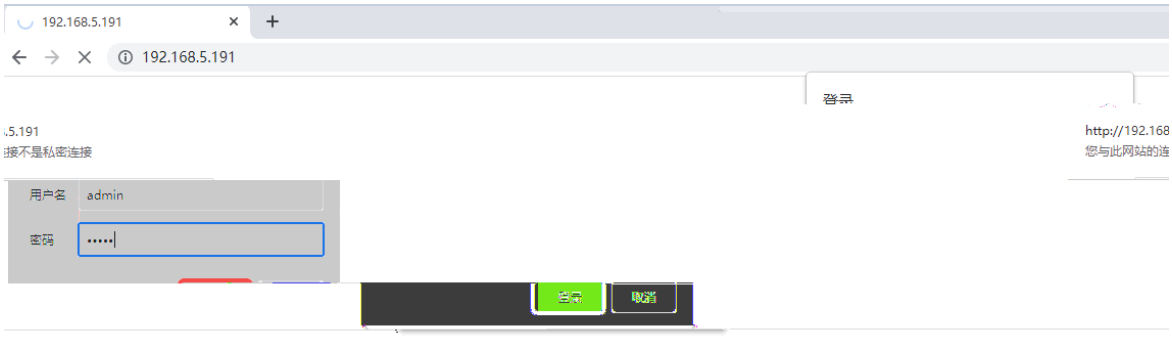

c <ᴊ ᴊ ᴊ ᴊ> ᴇ ᴊ ᴊ ᴘ ᴊ ᴍ ᴊ IP

d < ᴉ > ᴗ IPᴊ ᴊ ᴉ

4-3

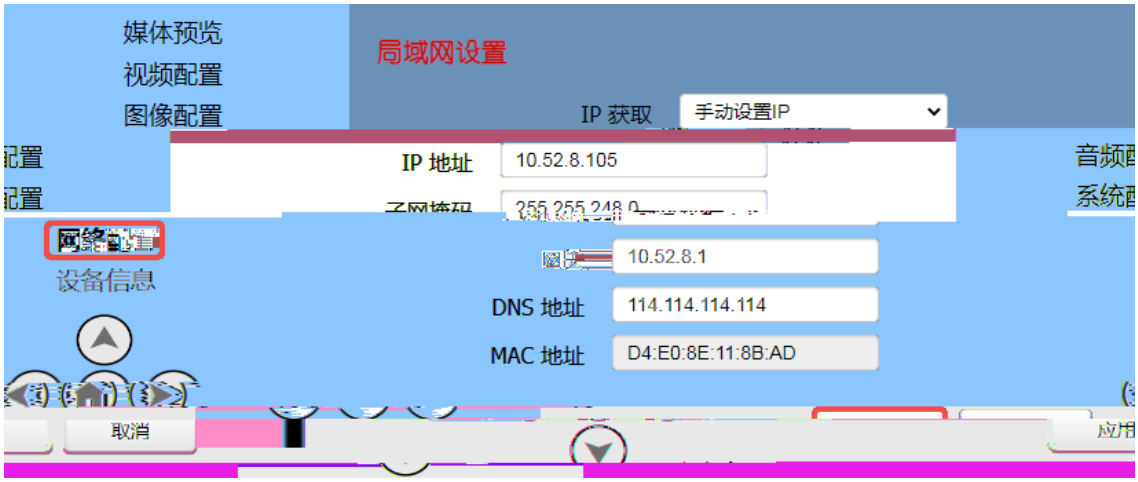

z ㄴ ب ɔ ǒ PC ڼ ڼ ل ص ڼ ´ ʌ ف

a ɔ ǒ PC ɔ ɵ ɹ ” ٹ ٮ ٮ ٮ “ ɔ

b ڤ [ʌ] ˜ ˛ ˥ ˧ ɸ IP

c [ب ل] ° ɸ ل IP

d <ɸ ل> ي IP ب ل ا

B*D

DDG5B- A5KF5‡ 9ɸ

4-4

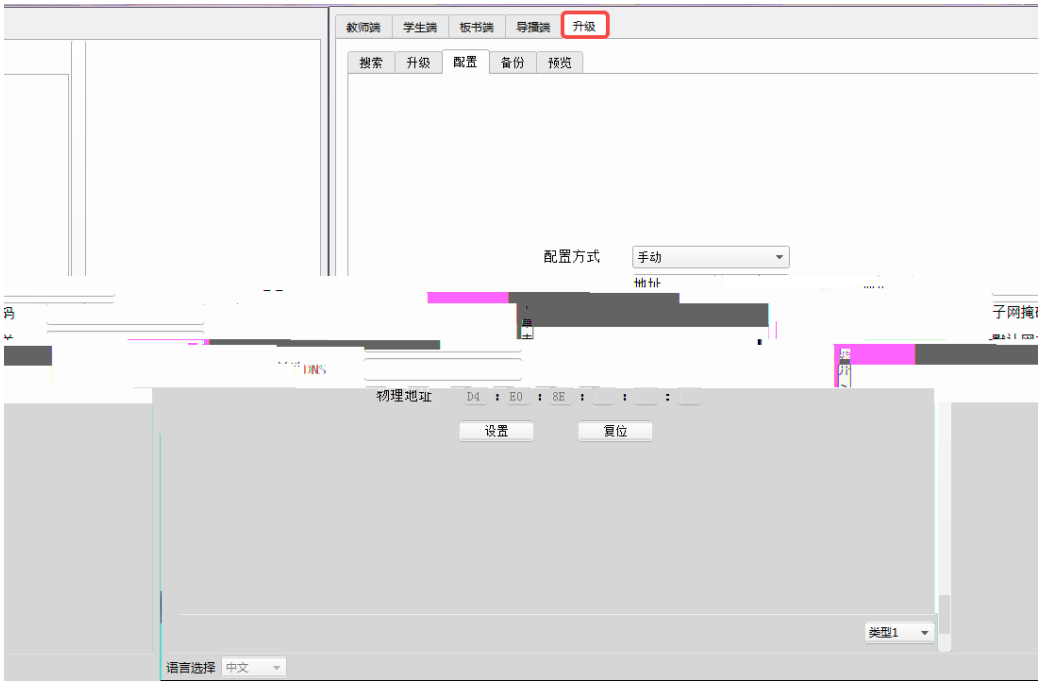

5

5.1

z ' ㄹ ㄱ ㄱ ⅞ ㄷ ㄱ ◊ ㄴ ㄱ ◊ ㄱ ㄴ

z ▌ㄴ ⃞ㄹ ㄱ ㄱ ㄷ ⃞ㄹ ㄱ ㄴ 6

z

	⎢ ن ص IE ⊨ η ᴌᴌ ᴅ IP Camera	● ᴛ PC ᴌ ᴎ ᴌᴌ ; ᴌ ᴎ ᴌ ᴀ* ᴎ ᴌ ᴏᴂ ᴠ ⅜ ᴅ PC ᴋ ᴌ ᴎ ᴛ ᴛ ᴎ ᴌ ᴛ ᴋ ´ ᴆ PC ᴀ ᴀ Ping ن ● ᴌ ᴎ ᴏᴂ ف ᴍ PC ف ᴠ ᴀ ᴨ ᴘ ᴌ IP ● ᴆ ᴏᴂ IP ᴌ . ᴌ ᴌ ᴌ * ● ᴆ MAC ᴌ ● ᴆ Web ᴎ ᴑ ᴌ ᴛ
	ᴌ IP ᴌ ᴌ ᴍ ᴀ .	● IP 192.168.5.191 ᴉ IP 192.168.5.163 ● ᴝ ᴎ ᴛ admin ᴝ ᴎ . admin